DO NOT SCALE OFF THIS DRAWING

A	STAINLESS STEEL HINGES	4
B	CYLINDER NIGHTLATCH LOCK	1
C	SPRING TOWER BOLT	2

GRP/12mm PLY/GRP CONSTRUCTION

EXTERNAL FINISH : SMOOTH GELCOAT
EXTERNAL COLOUR : T.B.A

INTERNAL FINISH : GRP.
INTERNAL COLOUR : WHITE.

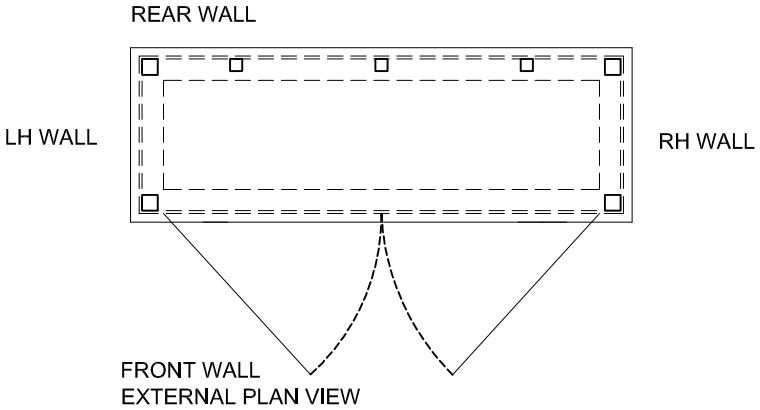

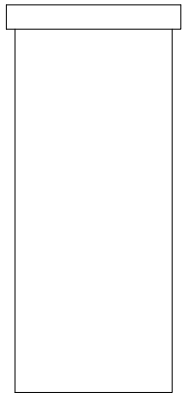

EXTERNAL VIEW ON LH WALL

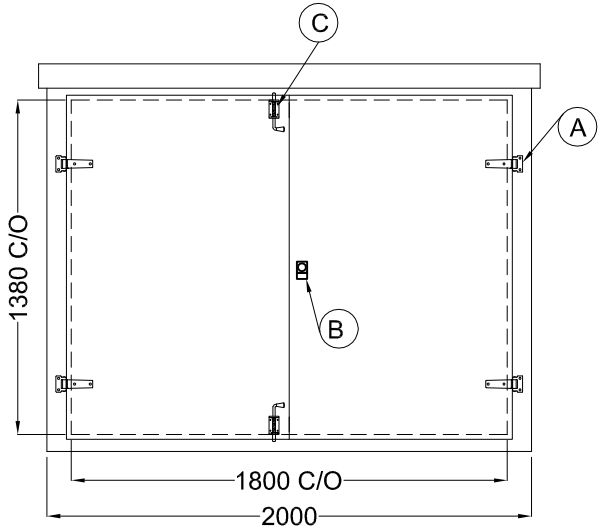

EXTERNAL VIEW ON FRONT WALL

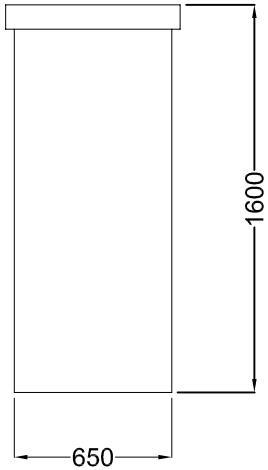

EXTERNAL VIEW ON RH WALL

EXTERNAL VIEW ON REAR WALL

REV	DATE	DETAILS OF REVISION	CKD	APP
A	11/12/08	ORIGINAL ISSUE		

DRAWN	CHECKED
DA	MT
11/12/08	11/12/08

INDUSTRIAL GRP LTD

THIS DRAWING AND DESIGN IS THE PROPERTY OF INDUSTRIAL GRP LTD AND WITHOUT THE WRITTEN CONSENT OF INDUSTRIAL GRP LTD MAY NOT BE COPIED IN WHOLE OR IN PART OR COMMUNICATED IN ANY FORM TO A THIRD PARTY.

UNIT 2 BLOCK C
CAPEL HENDRE IND EST
AMMANFORD
CARMARTHENSHIRE
SA18 3SJ

TEL : 01269 845800
FAX : 01269 845180

CLIENT :	INDUSTRIAL GRP	
SCALE :	NTS	SHEET 1 OF 1
DRAWING NUMBER :	C8	